OVERVIEW

OPERATION

ADMINISTRATION

HARDWARE

DEVELOPMENT

QUALIFICATION

SyCOS PROTOCOL Reference Manual

Version: 1.1
Date: January 2000
Author: F. L. Bruttin

Information in this document is subject to change without notice and does not represent a commitment on the part of **Syte GmbH**.

No part of this manual may be reproduced or transmitted in any form or by any means, electronic or mechanical, including photocopying, or information storage and retrieval systems, for any purpose except in accordance with the terms of any agreement to do so.

© l997-1999 Syte GmbH Switzerland. All Rights reserved.

Table Of Contents

1. Preface . . . 6
2. Concepts . . . 8
3. PROTOCOL INITIATION . . . 9
4. AUTOMATIC EVENT RECORDING . . . 10
4.1. Database Type Messages . . . 10
4.2. System Messages . . . 11
4.3. Operator Tracking Messages . . . 12
4.4. Extol Messages . . . 14
4.5. Operator Messages . . . 14
5. CUSTOMISED EVENT RECORDING . . . 15
6. BHF PROTOCOL . . . 16
6.1. Batch History File Selection . . . 19
6.2. Filter handling . . . 20
6.2.1. Filter fields definition . . . 21
7. BHFFILTER . . . 23
7.1. Query Possibilities . . . 24
7.2. Building A Criteria Set . . . 24
7.3. Definition of Filter Criteria . . . 24
7.4. Criteria AND Blocks - Rules . . . 26
7.5. Interval Definition . . . 28
7.6. Logical Equations . . . 28
7.7. Sample Query . . . 29
7.8. Field Descriptions . . . 30
7.9. Errors . . . 31
7.9.1. Filter Definition Errors . . . 31
7.9.2. Internal Errors . . . 32
7.9.3. Miscellaneous Errors . . . 32
8. BHF REDUNDANCY . . . 33
9. Bibliography . . . 34
10. Index . . . 35

List of Figures

Figure 1. BHF Protocol application icon 16
Figure 2. BHF Protocol application window 16
Figure 3. Help bubble example 18
Figure 4. BHF file selection 19
Figure 5. Filter window 20

List of Tables

Table 1. Analog Alarm Events 10
Table 2. Digital Alarm Messages 11
Table 3. Operator tracking DB events 12
Table 4. Operator tracking Extol events 13
Table 5. Operator tracking recipe events 13
Table 6. Operator tracking unit variable events 13
Table 7. Extol Messages 14
Table 8. Operator message events 14
Table 9. Field Operators 25
Table 10. Field Hierarchy 26
Table 11. Logical Terminology and Notation 29
Table 12. Message Field Descriptions 30

1. Preface

Contents

This document is the reference manual for the Protocol utilities. It is structured as follows:

- Chapter 3. PROTOCOL INITIATION describes how protocol files or Batch History files are initiated.
- Chapter 4. AUTOMATIC EVENT RECORDING describes which events are protocolled.
- Chapter 5. CUSTOMISED EVENT RECORDING describes how the user can define customised batch messages.
- Chapter 6. BHF PROTOCOL describes a window based utility which does the same thing.
- Chapter 7. BHFFILTER describes how batch history files are inspected using a command line query utility.

Audience

This manual is for automation engineers and plant managers. Automation engineers will be interested in generating protocol messages, while plant managers will be more interested in inspecting and processing the generated messages.

Validity

This manual applies primarily to SyCOS.

Related Documents

[Extol Reference].

[Alarm Summary Reference].

Conventions Used

The typographical conventions used in this manual follow below.

Fonts

The `Courier` font is used to highlight user inputs, file and directory names, the names of system utilities that are invoked from the operating system command interface, and for printed outputs from the system.

Style

The **`Courier`** font with bold style is used for Extol Statements.

Menus, Keys, Buttons

The `Courier` font is used to highlight menus, keys, and buttons which must be pressed or selected.

References

References to the bibliography are made using square brackets e.g. [Extol Reference].

This paragraph style and graphic indicates that some action may lead to consequences that are unwanted or undefined.

This paragraph style and graphic indicates that performing some action will lead to serious or dangerous consequences.

Request for Comments

If you have any problems with the text contained in this document or you wish to make suggestions for improvements feel free to contact the SyCOS Product Sup-

port Group, namely

Mr. Rolf Breitenstein
Syte GmbH
Seewenweg 5
CH-4153 Reinach, Switzerland

Please be sure to provide the full name of the document and its version number as stated on the front page.

This manual was written by F. L. Bruttin. It was adapted to SyCOS by R. Breitenstein.

2. Concepts

Introduction

Protocol is a collection of utilities in SyCOS, which enable redundant recording of significant events and user defined messages, in electronic form, for future inspection and processing. The terms “batch [history] messages”, “batch logs” and “batch protocol” all refer to the information stored. Note that the term “batch” has an historic origin and that the utilities are available for both batch and continuous processes. This document will refer to “**batch messages**” which are stored in “**batch history files**”.

Purpose

The Protocol utilities allow the automation engineer to trigger the storage of significant event information in batch history files. The automation engineer may also define custom messages for storage. This results in a chronological list of batch messages which reflect the process run. The plant manager can use this information to visualize the flow of events, to seek out problems and to search for optimization possibilities.

Presentation

Batch message protocolling for a particular unit starts when the Extol statement **`batchlog into`** is invoked. Alarm and operator tracking events are then automatically recorded. User defined messages and events may be recorded using the Extol statements **`print`** and **`trend`**. The recorded messages, stored in batch history files, may be inspected using a command line query utility called `bhffilter`, or a windows based query utility called `protocol`.

The sections in this manual reflect the above process, namely:

- Protocol initiation
- Automatic event recording
- Customised event recording
- Protocol
- Bhffilter

Licence

3. PROTOCOL INITIATION

Purpose

To start the storing of batch messages originating from a designated unit into a designated batch history file.

Related Information

The **`batchlog into`** command is fully described in the [Extol Reference] manual, and will not be repeated here.

4. AUTOMATIC EVENT RECORDING

Purpose

SyCOS continuously generates alarm and significant event messages. Once protocolling on a specific unit starts, these messages are additionally stored in the appropriate batch history file. This section of the manual lists those alarms and significant events which cause automatic message generation.

Related Information

The general structure of database, system and extol messages is described in the document [Alarm Summary Reference].

All possible alarm messages are listed in a separate document [Alarm Message Reference].

Presentation

Alarm and significant event messages may be divided into five main categories. These are:

- Database Type Messages
- System Messages
- Operator Tracking Messages
- Extol Messages
- Operator Messages

The following sections treat each category in detail.

4.1. Database Type Messages

There are two types of database messages, those relating to analog devices and those relating to digital devices.

Analog Devices

Analog alarm messages are generated by the following events:

Table 1: Analog Alarm Events

Alarm	Event	Event
HI	activated	deactivated
HIHI	activated	deactivated
LO	activated	deactivated
LOLO	activated	deactivated
DVHI	activated	deactivated
DVLO	activated	deactivated
ROC	activated	deactivated
LERR	activated	deactivated

Table 1: Analog Alarm Events

Alarm	Event	Event
WSFL	activated	deactivated
WSDA	activated	deactivated

Digital Devices

Digital alarm messages are generated by the following events:

Table 2: Digital Alarm Messages

Alarm	Event	Event
DEVN	activated	deactivated
STAT	activated	deactivated
UNDF	activated	deactivated
LERR	activated	deactivated
COS	activated	deactivated
ICOS	activated	deactivated
DCOS	activated	deactivated
MMFL	activated	deactivated
MMDA	activated	deactivated
MMTP	activated	deactivated

4.2. System Messages

System messages are not sent to the local unit's Batch History File when the Extol statement **`batchlog into`** is invoked (as described in "PROTOCOL INITIATION" on page 9).

SyCOS

One elt per MFC must be defined as the Watchdog elt in the Configuration file, as described in the document [Configuration Reference]. This Watchdog elt normally has a Parent Unit defined for it (the database field PUNI). If the Extol statement **`batchlog into`** was invoked for this Parent Unit, then all the system messages for this MFC go into the BHF defined there.

If no Parent Unit was defined or the Extol statement **`batchlog into`** was not invoked, then all system messages for this MFC go into the default BHF called trash.event.

All possible system alarm messages are listed in a separate document [Alarm Message Reference].

4.3. Operator Tracking Messages

Operator tracking messages may be divided into four categories, database action, Extol action, recipe action and unit variable action. The messages generated are caused by the following actions:

Database Action

Table 3: Operator tracking DB events

Action	Action Origin	Field
Change link I/O field	DBB	Any I/O link field
Change DB address field	DBB	Any link field
Change hardware address	DBB	ADDR
Change card allocation	DBB	C01-C21 (mux)
Create new DB block	DBB	
Delete DB block	DBB	
Define new equation	DBB	EQN
Set block to AUTO	DBB/GROUP	AM
Set block to MANUAL	DBB/GROUP	AM
Open cascade	DBB/GROUP	OPNA
Close cascade	DBB/GROUP	CLSA
Set new setpoint	DBB/GROUP	STPT
Set new output	DBB/GROUP	OUT
Drive device	DBB/GROUP	DEST
Acknowledge Sensor alarm	GROUP/ASDT	
Acknowledge Device alarm	GROUP/ASDT	
Drive analog output	DBB/GROUP	OUT
Drive digital output	DBB/GROUP	DEST
Set a loop to normal mode	DBB/GROUP	NMFL
Set a loop to maintenance mode	DBB/GROUP	NMFL
Set a loop to simulation mode	DBB/GROUP	SMFL
Reset a loop from simulation mode	DBB/GROUP	SMFL

Extol Action

Table 4: Operator tracking Extol events

Action	Action Origin	Action Origin
Run an operation	Unit Summary Display	Gedit Display
Authorized run	Unit Summary Display	Gedit Display
Kill an operation	Unit Summary Display	Gedit Display
Hold an operation	Unit Summary Display	Gedit Display
Restart an operation	Unit Summary Display	Gedit Display
Wake up an operation	Unit Summary Display	Gedit Display
Resume an operation	Unit Summary Display	Gedit Display
Suspend an operation	Unit Summary Display	Gedit Display
Instate a recipe	Unit Summary Display	Gedit Display

*

Recipe Action

Table 5: Operator tracking recipe events

Action	Action Origin	Action Origin
Change a recipe value	Unit Summary Display	Gedit Display

Unit Variable Action

Table 6: Operator tracking unit variable events

Action	Action Origin
Change unit variable value	Gedit Display

4.4. Extol Messages

Extol messages are divided into three sub-categories:

Table 7: Extol Messages

Messages Type	Event
Literal	print statement with prefix in Extol
Text	print statement in Extol
Runtime error	runtime error in Extol step

All possible runtime error messages are listed in a separate document [Alarm Message Reference].

4.5. Operator Messages

If the option to elicit operator comments for all console action, with the exception of Alarm Acknowledge, on a particular console is set, then the operator must enter a message for all actions on the following displays:

Table 8: Operator message events

Display
Unit Summary Display
Group Display
GEDIT Displays

For details on setting this option, see the console section of the [SyCOS Configuration File Reference].

5. CUSTOMISED EVENT RECORDING

Purpose

Customized event recording allows the user to define messages and events to be recorded in the batch history file.

Related Information

The Extol statements **`print`** and **`trend`** are fully described in the [Extol Reference] manual.

Invocation

The messages are defined and generated with Extol through the **`print`** statement, or from the database triggered by Extol with the **`trend`** statement.

6. BHF PROTOCOL

Purpose

The BHF Protocol utility is a screen based tool to query and printout batch messages. It offers an easy to use interface to the `bhffilter` utility. The queries are build upon filters which are stored in files. These can be loaded, edited and saved through the BHF Protocol utility.

Related Information

See “BHFFILTER” on page 23.

Invocation

The utility is activated on the operator console by selecting the option `BHF Protocol` from the `Applications Menu` (Selected with the right mouse button while the cursor is on the screen background) or by double-clicking on the application icon, if already present:

Figure 1: BHF Protocol application icon

The utility may also be activated on any engineering terminal by typing `protocol` (the utility is window based and requires the variable DISPLAY to be set accordingly, e.g. `export DISPLAY=phica05:0.0`)

Presentation

On invocation, the BHF Protocol application window appears as follows:

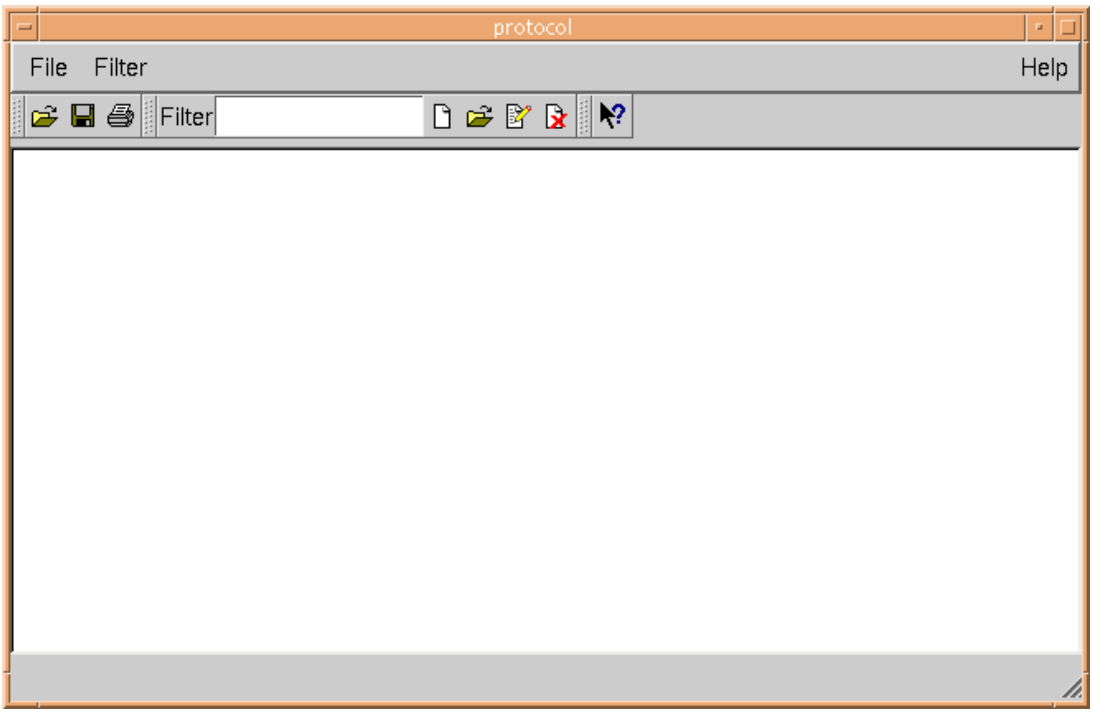

Figure 2: BHF Protocol application window

The application window is divided in several parts, from top to bottom:

Menu bar The menu bar has following structure:

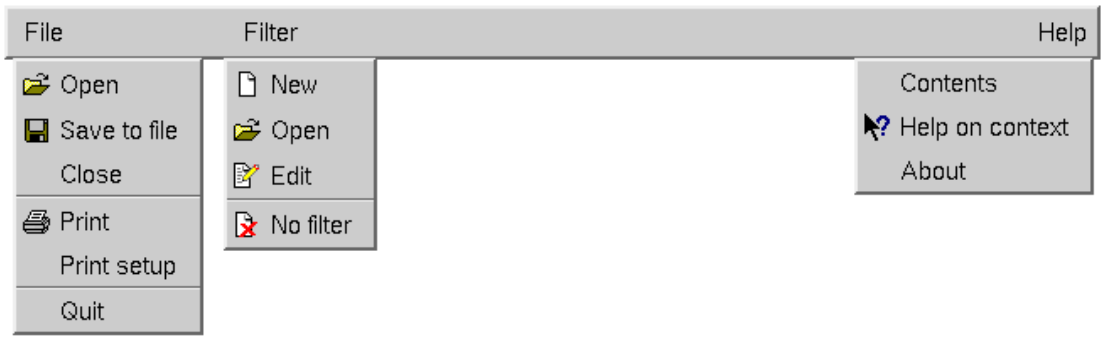

File menu:

- Open
  This menu entry will pop up the “Open Window” (See “BHF file selection” on page 19).
- Save to file
  The (filtered) contents of the visualisation area can be saved to a file with this option.
- Close
  The filtered batch messages are cleared.
- Print
  The filtered batch messages in the visualisation area are send to the printer destination defined in the “Print Setup” window.
- Print setup
  Opens a default “Print Setup” window.
- Quit
  Leaves the BHF Protocol application.

Filter menu:

- New
  The “Filter Window” is shown (See “Filter window” on page 20) and a new filter can be defined.
- Open
  A standard file selection box is shown to select an existing filter file. These will be located by default in the `$COSLOGS` directory.
- Edit
  The “Edit Filter” window is shown and the current filter can be edited.
- No filter
  The current filter is abandoned and the current batch file is shown entirely.

Help menu:

- Contents
  This feature is not implemented yet.
- Help on context
  Enters the “Help on context” mode. The cursor changes to a pointer with question mark and the user can click on any object of the user interface. If the clicked object has a help text, it will be displayed.
  Example: the user selects the “Help on context” menu entry and clicks on the

"Open filter" icon:

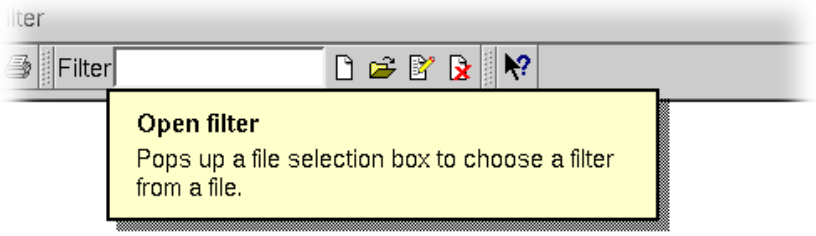

Figure 3: Help bubble example

- About
  Displays an information window with version information for the application, the SyCOS system and the used GUI toolkit.

Icon bar

The icon bar summarises the main functions of the BHF Protocol application. By clicking an icon, the same function as for the appropriate entry in the menu bar is executed:

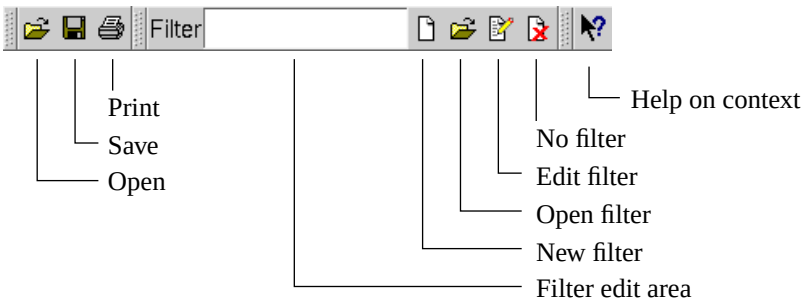

In the filter edit area, the name of the current filter is displayed. A new filter filename can also be entered to load a new filter.

Visualisation area

The visualisation area shows the filtered output of the `bhffilter` utility.

Status bar

The status bar shows status information for the BHF Protocol application.

6.1. Batch History File Selection

The user opens a BHF file by selecting the `File/Open` menu entry or by clicking on the “Open” icon in the icon bar (the left most icon). The file selection box appears:

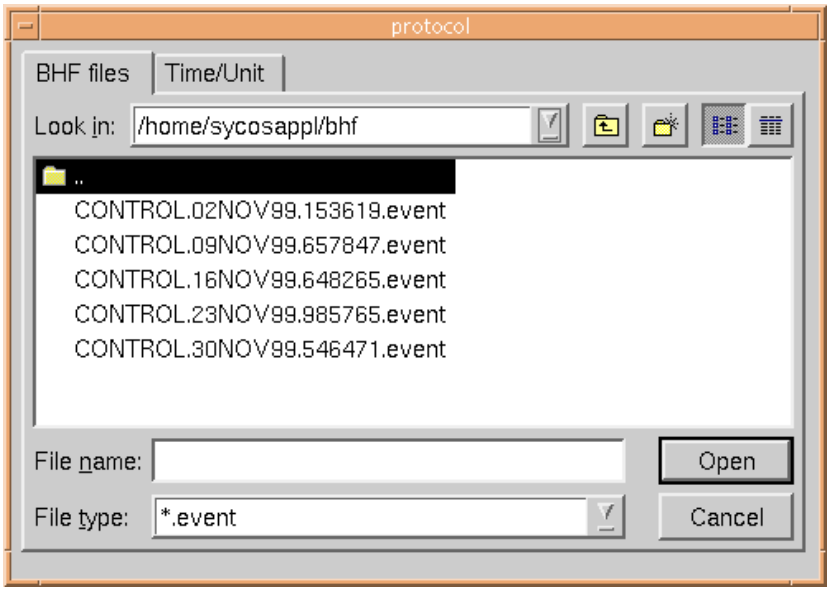

Figure 4: BHF file selection

The user selects one and only one BHF file and clicks on the “`Open`” button or double-clicks on a BHF file name.

Note: the Time/Unit feature is not implemented yet.

The selected BHF file is then displayed in the visualisation area with the current filter applied.

6.2. Filter handling

Introduction

Filters are used to execute queries on the BHF files. These filters are stored in files (in ASCII format). The BHF Protocol utility can be used to create these filter files and edit them. They have the default file extension `.bhffilter`.

Creating a new filter

A new filter is created using the `Filter/New` menu entry or by clicking on the "New filter" icon of the icon bar. The "Filter window" is then shown:

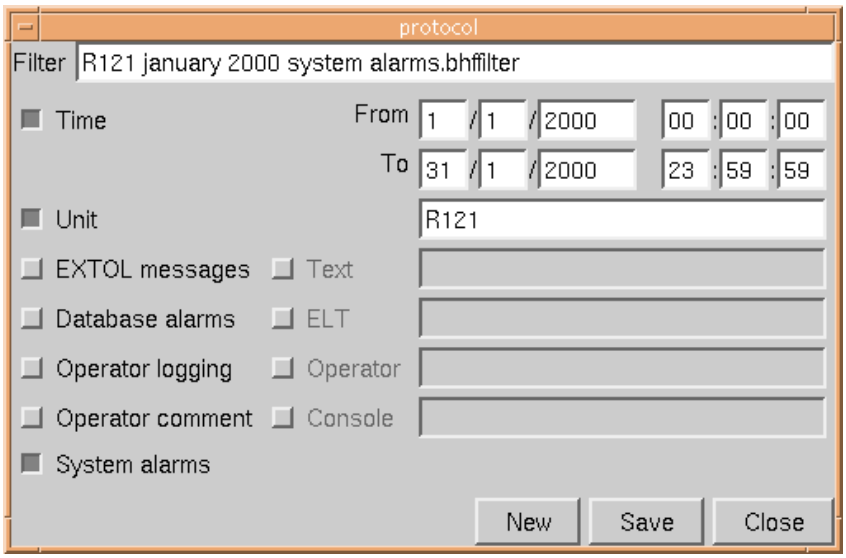

Figure 5: Filter window

The "Filter" field at the top shows the name of the current filter. A new filter name can be entered. When pressing the `Enter` key in the filter name field, a filter with the given name is loaded.

The filter can then be defined (See "Filter fields definition" on page 21).

A filter must always be saved before a query can be executed. This is done by selecting the `Save` button on the filter edit window. The user is prompted for a file name if he hasn't already entered one in the filter name field.

Discarding the filter window

The filter window is closed by pressing the `Close` button. The user is prompted to save his changes if he has not already done so.

Editing filter

The current filter can be edited by selecting the `Filter/Edit` menu entry or the "Edit Filter" icon on the BHF Protocol application window. The "Filter Window" with the current filter parameters is shown. The user must save his changes to make them active.

Open an existing filter

An existing filter file can be opened by selecting the `Filter/Open` menu entry or by clicking on the "Open filter" icon on the BHF Protocol application window. A standard file selection box is shown and the user can select an existing filter file. After selecting that file, the `bhffilter` utility is called with that filter as argument.

No filter

To see the BHF file which is currenlty selected entirely, the user can select the `Filter/No filter` menu entry or click on the "No filter" icon on the BHF Protocol application window.

6.2.1. Filter fields definition

No format/content checking	**During the filter edition there is no format or content checking on entered fields. Errors are picked up at the next processing stage when the utility `bhffilter` is called. See Table 12, "Message Field Descriptions," on page 30 for full details of criteria fields, and "BHFFILTER" on page 23 for the `bhffilter` utility.**
Time	If the toggle button is selected, only those batch messages found within the time interval are selected.
From	This is the lower limit of the time interval. It must be entered in the same format as the default entry.
To	This is the upper limit of the time interval. It must be entered in the same format as the default entry.
Unit	If the toggle button is selected, only those batch messages originating from the unit specified in the `Unit` data entry field, are selected.
Unit	This is the name of the unit to be selected.
EXTOL Messages	If this option is chosen, all Extol messages are selected. Additionally:
Text	If a string is entered in this data entry field, then only those Extol messages whose text matches this string are selected.
Database Alarms	If this option is chosen, all Process Database Alarm messages are selected. Additionally:
ELT	If a loop name is entered in this data entry field, then only Process Database Alarm messages for this ELT are selected.
Operator Logging	If this option is chosen, all operator tracking messages are selected. Additionally:
Operator	If an operator's name is entered in this field, then only those operator tracking messages which correspond to the specified operator, are selected.
Console	If a console name is entered in this field, then only those operator tracking messages which originated from the specified console, are selected. Note that "" are not needed as opposed to the definition in Table 12, "Message Field Descriptions," on page 30
Operator Comment	If this option is chosen, all operator comment messages are selected. Additionally:
Operator	If an operator's name is entered in this field, then only those operator comment messages which correspond to the specified operator, are selected.
On Console	If a console name is entered in this field, then only those operator comment messages which originated from the specified console, are selected. Note that "" are not needed as opposed to the definition in Table 12, "Message Field Descriptions," on page 30

Note

If both `Operator Logging` and `Comment` are selected with `Operator` and `Console`, then the entries in `Operator` and `Console` are used for both filters.

System Alarms

If this option is chosen, all system alarm messages are selected.

Combinations

The above filter criteria are bound as follows:

```
(time AND unit AND (EXTOL)) OR
(time AND unit AND (Database)) OR
(time AND unit AND (operator AND console)) OR
(time AND unit AND (moperator AND mconsole)) OR
(time AND unit AND (System));
```

7. BHFFILTER

Purpose

Bhffilter allows the user to query the contents of a batch history file. The query is stored in a filter file and the resulting output may be stored in an output file for further processing.

Related Information

See “BHF PROTOCOL” on page 16, for details of an easy to use windows interface to bhffilter.

Invocation

The bhffilter utility is run from an operator terminal with the following command:

```
bhffilter [-d] [-f <filter>] [-o <output file >] [-i
<input file>]
```

Parameters

-d debug — This is for debugging only. Additional internal information is displayed.

-f filter — This is optional and must be followed by a filename (including path) which contains the filter criteria that make up the query. If this parameter is omitted, the query is considered to be all records, i.e. all batch messages are displayed.

-o output file — This is optional and must be followed by a filename (including path). The filtered output will be redirected into this file. If the file exists it will be overwritten, otherwise it will be created. If this parameter is omitted, the output is sent to the standard output (normally the terminal screen).

-i input file — This is optional and must be followed by the filename (including path) of the batch history file to be filtered. If this parameter is omitted, the input is taken from the standard input (used with unix commands such as `tail`)

Examples

Example 1

```
bhffilter -f ~/filters/timefilter -i ~/bhf/
b10watertest.event
```

Use the query defined in `~/filters/timefilter` to filter the batch history file `~/bhf/b10watertest.event` and send the result to the standard output.

Example 2

```
bhffilter -f ~/filters/timefilter -o ~/bhfoutput/
b10watertest/timefilter.txt -i ~/bhf/
b10watertest.event
```

Use the query defined in `~/filters/timefilter` to filter the batch history file `~/bhf/b10watertest.event` and write the result to the output file `~/bhfoutput/b10watertest/timefilter.txt`.

Example 3 `tail ~/bhf/b10watertest.event | bhffilter`

Pipe the results of the tail command to the bhffilter utility. This command uses the standard input in place of an input file.

7.1. Query Possibilities

There are three query possibilities accepted by bhffilter.

ALL Terminated by a “;”, ALL causes all batch messages to be reported. No filtering takes place.

ALL EXCEPT criteria set All batch messages except those which satisfy the criteria set, are reported.

criteria set All alarms which satisfy the criteria set are reported.

7.2. Building A Criteria Set

A criteria set is created by defining filter conditions within Criteria AND Blocks (CAB) and linking the CABs together with logical ORs. Negation is not allowed.

The use of brackets aids readability.

The criteria set must be terminated by “;”.

Example (criteria_1 AND criteria_2) OR (criteria_3 AND criteria_4 AND criteria_5) OR criteria_6;

7.3. Definition of Filter Criteria

Batch Message Structure Each batch message has a clearly defined internal structure. Each message is constructed from individual fields which are connected in a hierarchical way. Table 10, “Field Hierarchy,” on page 26 shows this.

Bhffilter allows comparisons between the filter criteria and these fields. When defining a filter criteria, one should refer to the lowest appropriate field level in the hierarchy.

Synopsis `field` **`comparison-operator`** `value`

Operators In the expression to be evaluated, `field` and `value` must be of the same datatype. Table 12, “Message Field Descriptions,” on page 30 describes all possible fields, their datatypes and their notation.

Table 9: Field Operators

Operator	Meaning
=	equal
!=	not equal
<	less than
<=	less than or equal
>	greater than
>=	greater than or equal

Some fields such as datatype strings, may only be bound by logical operators “=” and “!=”.

Example 1 `meas > 26.34`

This filter criteria selects all batch messages which have a measured value greater that 26.34.

Example 2 `operator != Walter`

This filter selects all batch messages which do not have Walter as the operator.

Table 10: Field Hierarchy

level1	level2	level3	level4	level5	level6	level7	level8
alm_msg	alm_com	*unit*					
	alm_header	*time*					
	alm_msg	*alm_typ*					
		alm_mes_u	db_alm (DB_TYP)	*drnk*			
				bell			
				elt			
				db_dev	*dev_typ*		
					db_dev_u	digital (DB_DIG)	*act*
						analog (DB_ANA)	*meas*
							egu
			sm_alm (SM_TYP)	*host*			
				task			
				ecode			
			ot_alm (OT_TYP)	*operator*			
				console			
				key			
				action	*ot_typ*		
			em_alm (EM_TYP)	*oper*			
				txt			
				ex_msg	*ex_typ*		
					ex_msg_u	ex_prt (EM_LIT)	*var*
						.....(EM_TXT)	*val*
						ex_rte (EM_RTE)	*step*
							sub
			om_alm (OT_TYP)	*moperator*			
				mconsole			

7.4. Criteria AND Blocks - Rules

CAB Rules

The following rules hold within a Criteria AND Block (CAB). They do not apply to different CABs bound with ORs.

Rule 1 Fields may only appear once within a CAB, unless used with the“!=” operator.

Rule 2 If a type selection is made at level3, (i.e. alm_typ = DB_TYP), or at level6 (i.e. dev_typ = digital or ex_typ = EM_RTE), then

a) no deeper selection is allowed

b) selection of fields from other types is not allowed

Rule 3 If a field of an alarm type is selected at level5 or deeper, (i.e. act), then it is not possible to also select an alarm type at level3.

Rule 4 It is not possible to select a combination fields from different alarm types.

Unacceptable Filters The following examples show filters which would not be accepted by bhffilter.

Example 1 `oper = Walter AND unit = B10 AND oper = Fred;` [rule 1]

Example 2 `alm_typ = DB_TYP AND dev_typ = analog;` [rule 2a]

Example 3 `ex_typ = EM_RTE AND step = transfer;` [rule 2a]

Example 4 `dev_typ = digital AND console = “cons10”;` [rule 2b]

Example 5 `console = “cons4” AND alm_typ = OT_TYP`; [rule 3]

Example 6 `console = “cons4” AND host = mfc001;` [rule 4]

7.5. Interval Definition

The following fields allow specification of intervals:

Fields `time, drnk, meas, act, ecode, val`

Intervals are defined using the “=” or “!=” operators. The value of the field in the batch message must lie inside [outside] the limits. The limits must be of the same data type as the given field. See Table 12, “Message Field Descriptions,” on page 30 for full field descriptions.

Synopsis field = | !=] | [lowval, highval] | [

Brackets
`val = [lowval,highval]` implies `lowval <= val <= highval`
`val = ]lowval,highval]` implies `lowval < val <= highval`
`val = [lowval,highval[` implies `lowval <= val < highval`
`val = ]lowval,highval[` implies `lowval < val < highval`

Example 1 `time = ]18.7.96/12:05:00, 19.7.96/14:30:00];`
A filter where the start date and time do not belong to the interval.

Example 2 `meas != [13.92, 26.66[;`
A filter which searches for measurement values less than 13.92 or greater than or equal to 26.66.

7.6. Logical Equations

Limitations

All logical operators May be performed on the following fields if no interval is defined
`time, drnk, meas, act, ecode, val`

equal/unequal May be used with
`strings, bell, alm_typ, dev_typ, ot_typ, ex_typ`
Must be used with
`intervals`

Terminology and Notation

Table 11: Logical Terminology and Notation

Terminology	Notation
ALL	ALL, All, all
EXCEPT	EXCEPT, Except, except
Ending	;
Interval brackets	],[
logical AND	AND, and, &&, &, ^
logical OR	OR, or, v, V, |, ||
Equal	=
unequal, log. NOT	!=, #
smaller	<
smaller or equal	<=
greater	>
greater or equal	>=

7.7. Sample Query

```
ALL EXCEPT (time > 18.7.96/12:00:00 AND unit = B10 AND
ot_typ = OT_DB)
OR (time = [17.7.96/12:00:00, 19.7.96/14:00:00] AND
meas <= 24.99)
OR (oper = Fred AND step = TRANSFER)
OR (console = “cons4” AND operator = Joe);
```

7.8. Field Descriptions

Table 12: Message Field Descriptions

Field	Data Type	Value/notation	Description
time		[12.12.96/00:00:01, -]	time of message in message header
unit	char[11]	max. 11 characters: -._A-Z a-z 0-9	associated unit in message common text
alm_typ	int	DB_TYP|db_typ| SM_TYP|sm_typ| OT_TYP|ot_typ| EM_TYP|em_typ| OM_TYP|om_typ	type of alarm message
drnk	u_char	[0,255]	display rank of db alarm
bell	int	0|1|on|off	annunciator of db alarm
elt	char[11]	max. 11 characters: -._A-Z a-z 0-9	ELT name in db alarm
dev_typ	int	DB_ANA|ANALOG|analog DB_DIG|DIGITAL|digital	DB alarm subtypes
meas	float		measurement in ANALOG devices
egu	char[6]	max. 6 characters: -._A-Z a-z 0-9	engineering units in ANALOG devices
act	u_long	[0,2^32-1]	actual state in DIGITAL devices
host	char[8]	max. 8 characters: -._A-Z a-z 0-9	hostname on which error occurred in SM alarm
task	char[5]	max. 5characters: -._A-Z a-z 0-9	task in which SM error occurred
ecode	int	[-2^15, 0]	error code in SM alarm
operator	char[16]	max. 16 characters: -._A-Z a-z 0-9	operators name in OT messages
console	char[16]	max. 16 characters: -._A-Z a-z 0-9 enclosed in “ “	console name in OT messages enclosed in “ “
key	u_char	[0,255]	depressed key or button in OT messages
ot_typ	int	OT_DB|ot_db| OT_EX|ot_ex| OT_RCP|ot_rcp| OT_VAR|ot_var	operator tracking messages subtypes
oper	char[14]	max. 14 characters: -._A-Z a-z 0-9	operator name in Extol messages

Table 12: Message Field Descriptions

Field	Data Type	Value/notation	Description
txt	char[132]	max. 132 characters: -._A-Z a-z 0-9 enclosed in “ “	substring from Extol message text enclosed in “ “
ex_typ	int	EM_LIT|em_lit| EM_TXT|em_txt| EM_RTE|em_rte	Extol message subtypes
var	char[14]	max. 14 characters: -._A-Z a-z 0-9	unit variable in extol message subtypes EM_LIT and EM_TXT
val	short	[-2^7, 2^7-1]	acknowledge value in Extol message subtype EM_LIT and EM_TXT
step	char[14]	max. 14 characters: -._A-Z a-z 0-9	Extol step in Extol message subtype EM_RTE
sub	char[14]	max. 14 characters: -._A-Z a-z 0-9	Extol subroutine in Extol message subtype EM_RTE
moperator	char[16]	max. 16 characters: -._A-Z a-z 0-9	operators name in OM messages
mconsole	char[16]	max. 16 characters: -._A-Z a-z 0-9 enclosed in “ “	console name in OM messages enclosed in “ “

7.9. Errors

7.9.1. Filter Definition Errors

Bad definition of interval The interval limits are incorrectly defined, possibly reversed.

2nd selection of same field with AND not allowed Rules 1 to 4 for Criteria ADD Blocks have been broken. See “Criteria AND Blocks - Rules” on page 26 for full details.

whole alarm type selection with AND not allowed Rules 1 to 4 for Criteria ADD Blocks have been broken. See “Criteria AND Blocks - Rules” on page 26 for full details.

Field selection with AND not allowed Rules 1 to 4 for Criteria ADD Blocks have been broken. See “Criteria AND Blocks - Rules” on page 26 for full details.

7.9.2. Internal Errors

Error opening a read only filter	The selected filter file could not be opened. The file is either non-existent or read protected.
Error closing a filter	The selected filter file could not be closed.
Error creating an output file	The selected output file (option -o) could not be created.
Error reading the status of a filter file	The file status, which contains the file length, could not be read.
Error seeking in a file	Could not position in a file.
Error reading data from a file	Not possible to read a defined number of bytes from a selected file.
Error writing data to a file	Not possible to write a defined number of bytes to a selected file.

7.9.3. Miscellaneous Errors

Syntax error	Syntax error found in filter file or datatype mismatch.
Error while converting text	An internal structure, alm_msg, could not be converted into text.
Lost information of filter criteria	Defined filter criteria was lost. Try restarting bhffilter.

8. BHF REDUNDANCY

Purpose

To ensure against the loss of batch messages stored in Batch History Files.

If a PIC is shut-down for maintenance for example, when it comes back on-line, it will scan the other PICs in the configuration for batch messages which occurred during its down time. It will then integrate these messages into its own BHFs. This mechanism is transparent to the user.

Related Information

For minimum redundancy, there must be two PICs. These must be configured to receive Batch History Files by defining 'BHF' in the 'ALARMDESTINATIONS' section of the PIC section of the system configuration file. For full configuration details see [Configuration Reference].

9. Bibliography

Extol Reference SyCOS Extol Reference, Version 1.0, July 1999.

Alarm Summary Reference SyCOS Alarm Summary Display, Version 1.0, July 1999.

Configuration Reference SyCOS Configuration File Reference, Version 1.0, July 1999.

Alarm Message Reference SyCOS Message Catalog, Version 1.0, July 1999.

Index

A
Alarm Messages
    See message

B
batchlog into 9
bhffilter
    command line 23
    criteria 24, 26
    examples 23
    query 24

C
criteria
    building 24
    definition 24
    interval 28
    operators 24
    rules 26
    sample 29

D
database
    analog 10
    digital 11
Database Alarms
    protocol 21
DISPLAY 16

E
errors
    bhffilter 31
Extol
    literal 14
    runtime error 14
    text 14
EXTOL Messages 21

F
filter
    format 21

I
interval 28

M
message
    database 10, 11
    Extol 14
    generation 10
    operator comment 14
    operator tracking 12, 13
    storing 9
    structure 10, 24
    system 11

O
Operator Comment
    protocol 21
Operator Logging
    protocol 21
operator tracking
    database 12
    Extol 13
    recipe 13
    unit variable 13

P
parent unit 11
print 15

S
System Alarms 11
    destination 11
    protocol 22

T
TIME-Filter ON/OFF 21
trash.event 11
trend 15

U
UNIT-Filter ON/OFF 21

W
watchdog 11

Replaces: SyCOS PROTOCOL Reference Manual version 1.0	Valid from:
	Appendices:
	Addendum:

Author:	Title & Name:	Date:	Signature:
	R. Breitenstein	.....	.....
		.....	.....
Checked:	Title & Name:	Date:	Signature:
	D. Juillet	.....	.....
Accepted:	Title & Name:	Date:	Signature:
	R. Breitenstein	.....	.....
Valid for:	SyCOS Applications		
Distribution:			
	Syte GmbH	Master Folder	

Document Change Control

Date of Change:	Changed by:	Accepted by:	Reason for change:
30.07.1996	F.L.Bruttin		Initial version released for review.
18.09.1996	F.L.Bruttin		Ver. 1.1 FR282 after review by R.Breitenstein
09.10.96	F.L.Bruttin		FR290 - Note version 8.1.3 features Added BHF Redundancy section
Dec. 1998	R. Breitenstein		Adapted for CGS Version 8.2.1
July 1999	D. Juillet		Adapted to SyCOS
Jan. 2000	Philippe Cadé		Changed chapter 6 to match new BHF protocol version